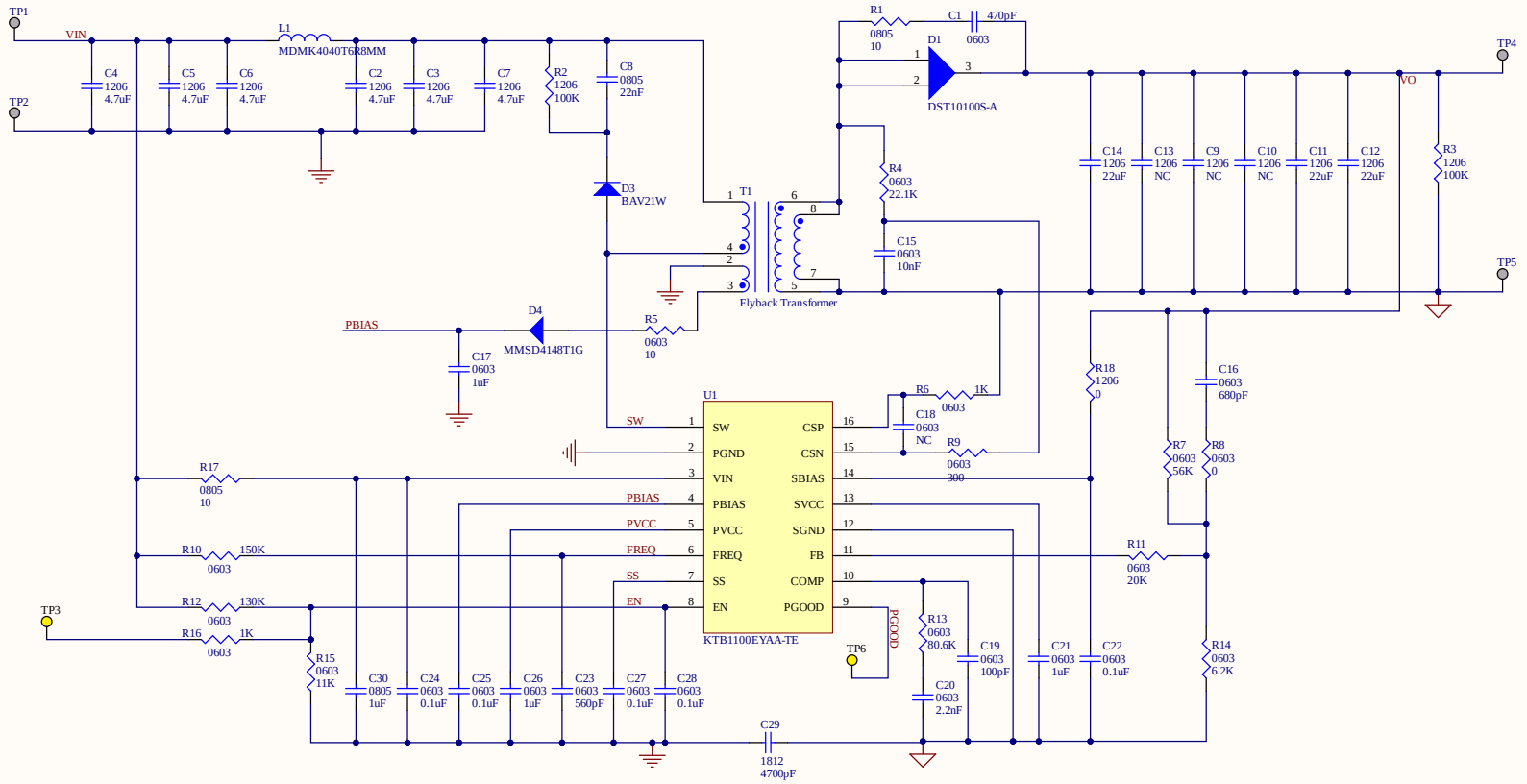

Title **KTB100EYAA-MMEV01**		*Kinetic Technologies* *6399 San Ignacio Ave* *Ste 250* *San Jose, Ca 95119* *USA*
Size: A3	Number:1 Revision:1.0	
Date: 3/7/2023	Time: 12:04:31 PM Sheet 1 of 1	
Drawn By: Ricardo Portals		

SCH-0012-01

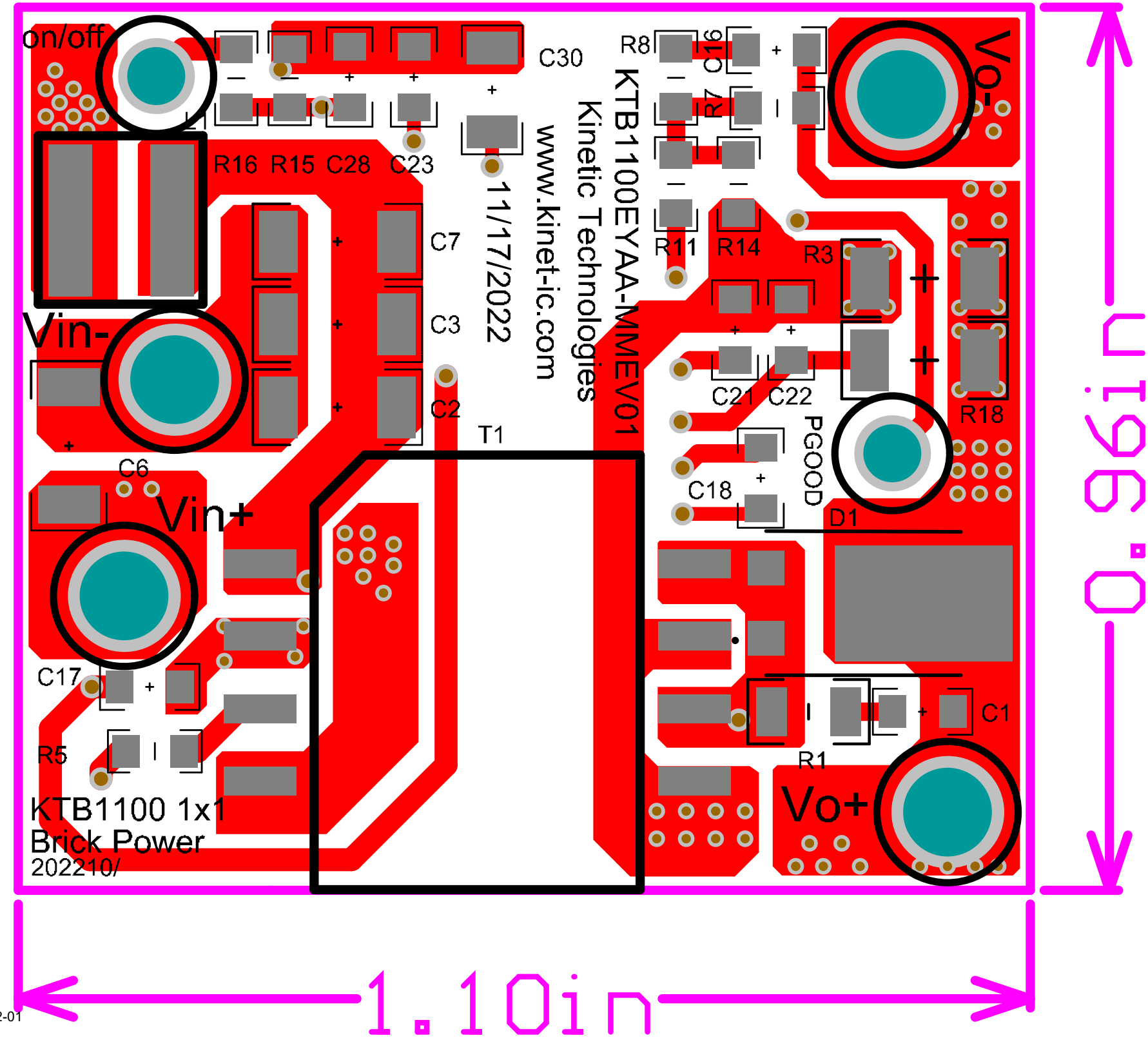
on/off
C30
R8
C16
R7
Vo-
KTB1100EYAA-MMEV01
Kinetic Technologies
www.kinet-ic.com
11/17/2022
R16 R15 C28 C23
C7
C3
C2
T1
R11
R14
R3
C21 C22
PGOOD
R18
C18
D1
Vin-
C6
Vin+
C17
R5
C1
R1
Vo+
KTB1100 1x1
Brick Power
202210/
0.96in
1.10in

SCH-0012-01

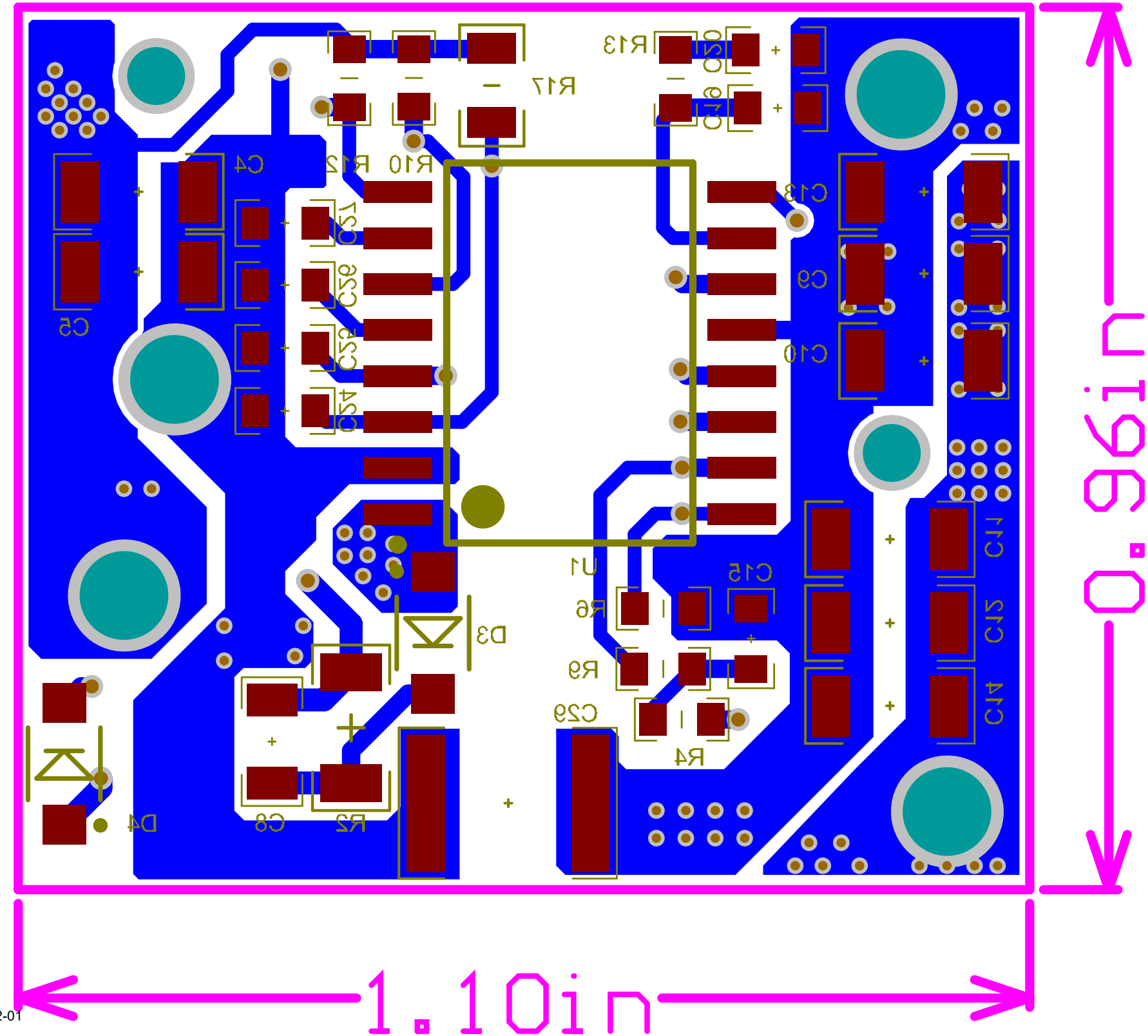
R13
R17
C20
C21
C4
R10
R12
C13
C9
C10
C6
C24
C25
C26
C27
U1
C15
R6
R9
C29
R4
D3
D4
C8
R2
C14
C15
C17
0.96in
1.10in

SCH-0012-01